温度調節器（デジタル調節計）（22.5mm幅DINレール取り付けタイプ）

# E5DC-RX2ASM-017

# 商品概要

Digital Temperature Controller, 22.5 mm wide, Relay output, Auxiliary output: 2, Power supply voltage: 100 to 240 VAC, Screw terminal block model, Universal inputs, HB alarm and HS alarm: 1, 1 event input

## 販売状況

2025/07/04 00:00 情報更新

| | |
|---|---|
| 販売状況 | 販売中 |
| 機種区分 | 受注生産機種 |
| 標準価格(税別) | ¥ 26,000 |

推奨代替品の最新情報につきましては、当社Webサイト(www.fa.omron.co.jp)の「生産終了品/推奨代替品」をご覧ください。
在庫状況/標準価格の最新情報につきましては、当社Webサイト(www.fa.omron.co.jp)の「在庫状況/標準価格 照会」をご覧ください。

# 詳細情報

## Ratings / Performance

情報更新：2024/08/19

### Ratings

| | | |
|---|---|---|
| Shape | | 22.5 mm wide |
| Fixed/Programmable | | Fixed |
| Power supply voltage | | 100 to 240 VAC (50/60 Hz) |
| Allowable voltage variable range | | 85 to 110% of the power supply voltage |
| Power consumption | | 4.9 VA max. (at 100 to 240 VAC) |
| Input | Number of input points | 1 point |
| | Temperature input | Thermocouple: K, J, T, E, L, U, N, R, S, B, C/W, PLII<br>Platinum resistance thermometer: Pt100, JPt100<br>Infrared Thermosensor: 10 to 70 °C, 60 to 120 °C, 115 to 165 °C, 140 to 260 °C |
| | Analog input | 4 to 20 mA, 0 to 20 mA, 1 to 5 V, 0 to 5 V, 0 to 10 V |
| | Input impedance | Current input: 150 Ω max., voltage input: 1 MΩ min. (Applicable when connecting 1:1 to ES2-HB-N/THB-N.) |
| Control method | | ON/OFF control or 2-PID control (with auto-tuning) |
| Control output | Number of total control output | 1 point |
| | Control output 1 | Relay output |
| | Control output 2 | None |
| | Relay output | 1 point<br>SPST-NO, 250 VAC, 3 A (resistive load)<br>Minimum applicable load: 10 mA at 5 V |
| Auxiliary output | Number of total auxiliary output | 2 point |
| | Relay output | SPST-NO, 250 VAC, 2 A (resistive load), electrical life: 100,000 operations (minimum applicable load: 5 V, 10 mA) |
| Event input | | 1 point<br>Contact input: ON: 1 kΩ max., OFF: 100 kΩ min.<br>No-contact input: ON: Residual voltage 1.5 V max., OFF: Leakage current 0.1 mA max.<br>Current flow: Approx. 7 mA per point |
| Setting method | | Digital setting using front panel keys |
| Indication method | | 11-segment digital display and individual indicators |
| Multi SP functions | | Up to eight set points (SP0 to SP7) can be saved and selected using the event inputs, or key operations. (There are two at event inputs) |

| | | |
|---|---|---|
| Sampling period | | 50 ms |
| Hysteresis | | Temperature input: 0.1 to 999.9 °C or °F (in units of 0.1 °C or °F)<br>Analog input: 0.01 to 99.99% FS (in units of 0.01% FS) |
| Proportional band | | Temperature input: 0.1 to 999.9 °C or °F (in units of 0.1 °C or °F)<br>Analog input: 0.1% to 999.9% FS (in units of 0.1% FS) |
| Integral time | | 0 to 9999 s (in units of 1 s), 0.0 to 999.9 s (in units of 0.1 s) |
| Derivative time | | 0 to 9999 s (in units of 1 s), 0.0 to 999.9 s (in units of 0.1 s) |
| for cooling | Proportional band (P) | Temperature input: 0.1 to 999.9 °C or °F (in units of 0.1 °C or °F)<br>Analog input: 0.1% to 999.9% FS (in units of 0.1% FS) |
| | Integral time (I) | 0 to 9999 s (in units of 1 s), 0.0 to 999.9 s (in units of 0.1 s) |
| | Derivative time (D) | 0 to 9999 s (in units of 1 s), 0.0 to 999.9 s (in units of 0.1 s) |
| Control period | | 0.1 s, 0.2 s, 0.5 s, 1 to 99 s (in units of 1 s) |
| Manual reset value | | 0.0 to 100.0% (in units of 0.1%) |
| Insulation resistance | | Between charged terminals and exposed uncharged parts: 20 MΩ min. (500 VDC)<br>Between current-carrying terminals: 20 MΩ min. (500 VDC)<br>Between non-continuous contacts: 20 MΩ min. (500 VDC) |
| Dielectric strength | | 3,000 VAC 50/60 Hz 1 min (Between current-carrying terminals of different polarity) |
| Vibration resistance | | Destruction: 10 to 55 Hz, 20 $m/s^2$ for 2 h each in X, Y, and Z directions<br>Malfunction: 10 to 55 Hz, 20 $m/s^2$ for 10 min each in X, Y, and Z directions |
| Shock resistance | | Destruction: 300 $m/s^2$, 3 times each in X, Y, and Z directions<br>Malfunction: 100 $m/s^2$, 3 times each in X, Y, and Z directions |
| Ambient temperature (Operating) | | -10 to 55 °C (with no freezing or condensation)<br>For 3-year warranty with standard mounting: -10 to 50 °C (with no freezing or condensation) |
| Ambient temperature (Storage) | | -25 to 65 °C (with no freezing or condensation) |
| Ambient humidity (Operating) | | 25 to 85 % |
| Altitude | | 2000 m max. |
| Degree of protection | | Main unit: IP20, Terminal unit: IP00 |
| Memory protection | | Non-volatile memory (number of writes: 1,000,000) |
| Case color | | Black |

| | |
|---|---|
| Terminal type | Screw terminal block |
| Accessories | Instruction manual, Compliance information sheet |
| Weight | Main Unit: Approx. 80 g<br>Terminal unit: Approx. 40 g |
| Sold separately | Terminal Unit: E5DC-SCT1S<br>USB Serial Conversion Cable: E58-CIFQ2<br>Communications Conversion Cable: E58-CIFQ2-E<br>Mounting adapter: Y92F-53<br>Short bar: Y92S-P11<br>CX-Thermo Support Software: EST2-2C-MV4<br>End Plate: PFP-M<br>Spacer: PFP-S<br>DIN Tracks: PFP-100N/PFP-50N<br>Unit label: Y92S-L2<br>End Cover: Y92F-54<br>Current Transformer (CT):<br>E54-CT1/E54-CT1L/E54-CT3/E54-CT3L |

## Accuracy

| | |
|---|---|
| Indication accuracy | Thermocouple: (±0.3% of indicated value or ±1 °C, whichever is greater) ±1 digit max.<br>Platinum resistance thermometer: (±0.2% of indicated value or ±0.8 °C, whichever is greater) ±1 digit max.<br>Analog input: ±0.2% FS ±1 digit max.<br>(The indication accuracy of K thermocouples in the -200 to 1300 °C range, T and N thermocouples at a temperature of -100 °C max., and U and L thermocouples at any temperatures is ±2 °C ±1 digit max. B thermocouple at a temperature of 400 °C max. is not specified. B thermocouples in the 400 to 800 °C range is ±3 °C max. R and S thermocouples at a temperature of 200 °C max. is ±3 °C ±1 digit max. C/W thermocouples is (±0.3% PV or ±3 °C, whichever is greater) ±1 digit max. PL II thermocouples is (±0.3% PV or ±2 °C, whichever is greater) ±1 digit max.) |
| Influence of temperature/voltage | Thermocouple: R, S, B, C/W, and PLII: (±1% of indicated value or ±10 °C, whichever is greater) ±1 digit max.<br>Others: (±1% of indicated value or ±4 °C, whichever is greater) ±1 digit max.. However K thermocouple at -100 °C max.: ±10 °C max.<br>Platinum resistance thermometer: (±1% of indication value or ±2 °C, whichever is greater) ±1 digit max.<br>Analog input: ±1% FS ±1 digit max.<br>CT input: ±5% FS ±1 digit max.<br>Ambient temperature: -10 to 23 to 55 °C, Voltage range: -15 to 10% of rated voltage |
| Influence of EMS. | Thermocouple: R, S, B, C/W, and PLII: (±1% of indicated value or ±10 °C, whichever is greater) ±1 digit max.<br>Others: (±1% of indicated value or ±4 °C, whichever is greater) ±1 digit max.. However K thermocouple at -100 °C max.: ±10 °C max.<br>Platinum resistance thermometer: (±1% of indication value or ±2 °C, whichever is greater) ±1 digit max.<br>Analog input: ±1% FS ±1 digit max. |
| Influence of signal source resistance | Thermocouple: 0.1°C/Ω max. (100 Ω max.)<br>Platinum resistance thermometer: 0.1°C/Ω max. (10 Ω max.) |

## Heater burnout /SSR failure detector

| | |
|---|---|
| CT input (for heater current detection) | 1 point |
| Max. heater current | Single-phase 50 A AC |
| Input current indication accuracy | ±5% FS ±1 digit max. |

| | |
|---|---|
| Heater burnout alarm setting range | 0.1 to 49.9 A (in units of 0.1 A)<br>Minimum detection ON time: 100 ms (The value is 30 ms for a control period of 0.1 s or 0.2 s) |
| SSR failure detector alarm setting range | 0.1 to 49.9 A (in units of 0.1 A)<br>Minimum detection OFF time: 100 ms (The value is 35 ms for a control period of 0.1 s or 0.2 s) |

# Dimensions

情報更新：2024/08/19

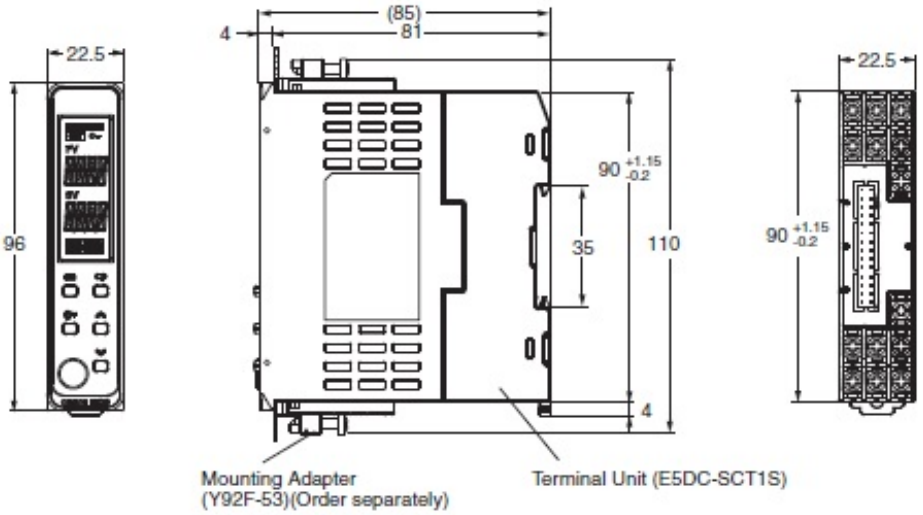


- Setup Tool ports are provided as standard feature. Use these ports to connect a computer to the Digital Temperature Controller. The E58-CIFQ2 USB-Serial Conversion Cable is required to connect to the port on the bottom panel. The E58-CIFQ2 USB-Serial Conversion Cable and E58-CIFQ2-E Communications Conversion Cable are required to connect to the port on the front panel. (You cannot leave either port connected constantly during operation.)

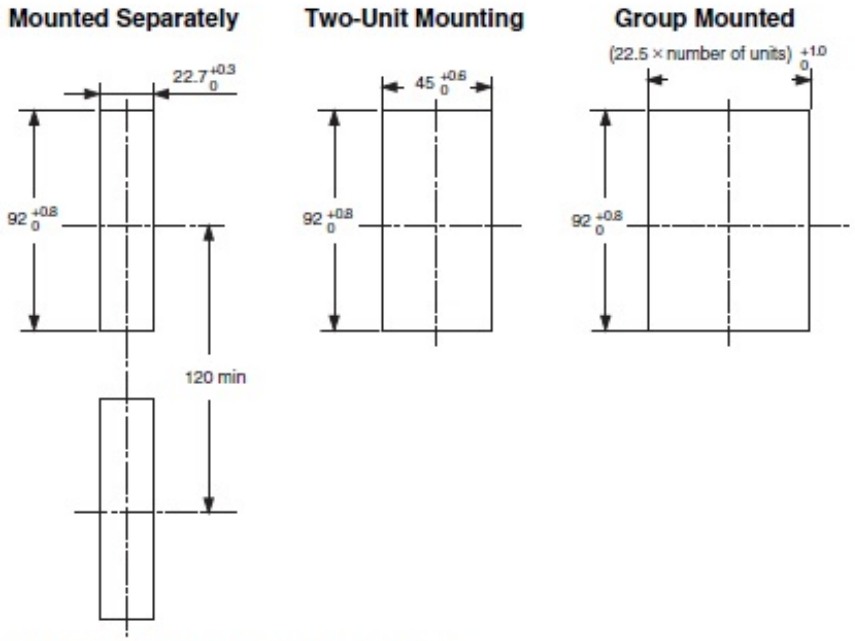


- Recommended panel thickness is 1 to 8 mm.
- Group mounting is not possible in the vertical direction. (Maintain the specified mounting space between Controllers.)
- When two or more Digital Temperature Controllers are mounted, make sure that the surrounding temperature does not exceed the allowable operating temperature specified in the specifications.

# Connection diagram

情報更新：2024/08/19

## E5DC (Models with Screw Terminal Blocks)

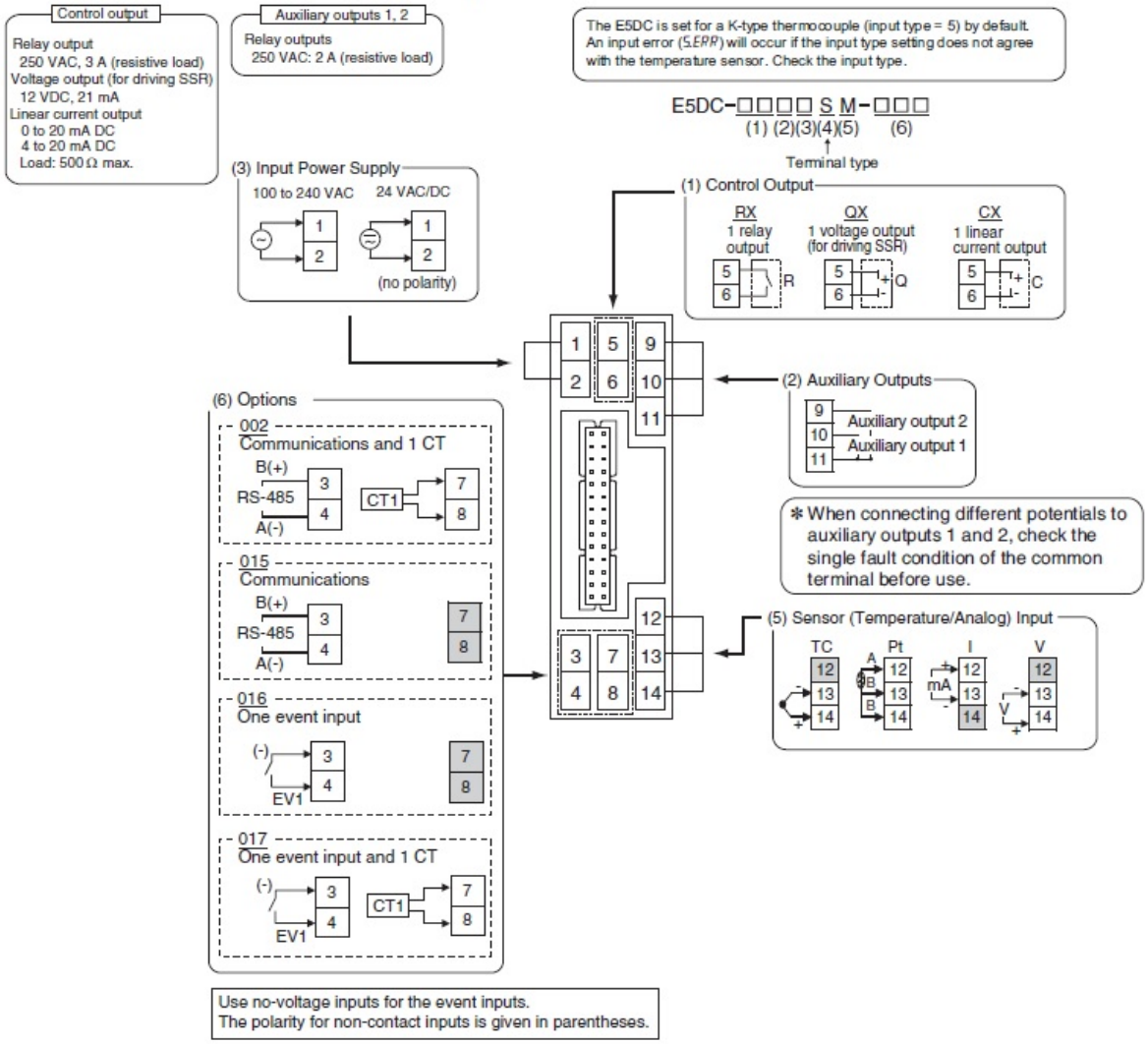


**Note:** 1. The application of the terminals depends on the model.
2. Do not wire the terminals that are shown with a gray background.
3. When complying with EMC standards, the cable that connects the sensor must be 30 m or less. If the cable length exceeds 30m, compliance with EMC standards will not be possible.
4. Connect M3 crimped terminals.
5. Due to UL Listing requirements, use the E54-CT1L or E54-CT3L Current Transformer with the factory wiring (internal wiring). Use a UL category XOBA or XOBA7 current transformer that is UL Listed for field wiring (external wiring) and not the factory wiring (internal wiring).
6. The terminal layout is different than models with Push-In Plus terminal blocks. Check the terminal arrangement before wiring.

# Input ranges list

情報更新：2024/08/19

## Thermocouple/Platinum Resistance Thermometer (Universal inputs)

| Sensor type | Platinum resistance thermometer | | | | | Thermocouple | | | | | | | | | | | | | | | | | Infrared temperature sensor | | | |
|---|---|---|---|---|---|---|---|---|---|---|---|---|---|---|---|---|---|---|---|---|---|---|---|---|---|---|
| Sensor specification | Pt100 | | | JPt100 | | K | | J | | T | | E | L | U | | N | R | S | B | C/W | PLII | 10 to 70°C | 60 to 120°C | 115 to 165°C | 140 to 260°C |
| Temperature range (°C) | 850 | 500.0 | 100.0 | 500.0 | 100.0 | 1300 | 500.0 | 850 | 400.0 | 400 | 400.0 | 600 | 850 | 400 | 400.0 | 1300 | 1700 | 1700 | 1800 | 2300 | 1300 | 90 | 120 | 165 | 260 |
| | -200 | -199.9 | 0.0 | -199.9 | 0.0 | -200 | -20.0 | -100 | -20.0 | -200 | -199.9 | -200 | -100 | -200 | -199.9 | -200 | 0 | 0 | 100 | 0 | 0 | 0 | 0 | 0 | 0 |
| Set value | 0 | 1 | 2 | 3 | 4 | 5 | 6 | 7 | 8 | 9 | 10 | 11 | 12 | 13 | 14 | 15 | 16 | 17 | 18 | 19 | 20 | 21 | 22 | 23 | 24 |

Shaded settings are the default settings.

The applicable standards for the input types are as follows:

K, J, T, E, N, R, S, B: JIS C 1602-2015, IEC 60584-1
L: Fe-CuNi, DIN 43710-1985
U: Cu-CuNi, DIN 43710-1985
C/W: W5Re/W26Re, JIS C 1602-2015, ASTM E988-1990
JPt100: JIS C 1604-1989, JIS C 1606-1989
Pt100: JIS C 1604-1997, IEC 60751
PL II: According to Platinel II electromotive force charts from BASF (previously Engelhard)

## Analog input

| Input type | Current | | Voltage | | |
|---|---|---|---|---|---|
| Input specification | 4 to 20 mA | 0 to 20 mA | 1 to 5 V | 0 to 5 V | 0 to 10 V |
| Setting range | Usable in the following ranges by scaling:<br>-1999 to 9999, -199.9 to 999.9,<br>-19.99 to 99.99 or -1.999 to 9.999 | | | | |
| Set value | 25 | 26 | 27 | 28 | 29 |

# RoHS/REACH対応状況

情報更新：2025/7/02

## EU RoHS

| 対応状況 ※1 | 対応予定月 ※2 | 非含有証明書 ※3 |
|---|---|---|
| 対応済み | | ダウンロードはこちら |

## 中国 RoHS

| 中国 RoHS表 ※1※2 | | | | | | |
|---|---|---|---|---|---|---|
| 鉛（PB） | 水銀（Hg） | カドミウム（Cd） | 六価クロム（Cr(VI)） | ポリ臭化ﾋﾞﾆﾌｪﾙ（PBB） | ポリ臭化ｼﾞﾌｪﾆﾙｴｰﾃﾙ(PBDE) | 環境保護使用期限 |
| X | O | O | O | O | O | 10 |

・“対応済み”や非含有の記載がされた商品であっても、流通在庫等で未対応品が混在する可能性があります。
・非含有品が必要な際は、弊社営業部門もしくは販売店へお問い合わせください。

この製品のRoHS/REACH対応状況ページへ >

# 注意事項・凡例

”対応済み”で記載される商品であっても、流通在庫等で未対応品が混在する可能性があります。
非含有品が必要な際は、弊社営業部門もしくは販売店へお問い合わせください。

## ※1 対応状況

- Ro 対応済み　：EU RoHS指令（10物質）の非含有に対応した製品が提供可能な商品です。
- 対応予定　：EU RoHS指令（10物質）の非含有に対応した製品に切り替える予定のある商品です。
- 対応予定なし　：EU RoHS指令（10物質）の非含有に非対応の商品で、対応品を出す予定はありません。
- 調査・確認中　：EU RoHS指令（10物質）の非含有の対応状況を調査中または確認中の商品です。
- 非該当品　：ライセンス料など無形物で、有害物質有無と関係のない商品です。

仕入先様の事情により、非含有部品としていたものが、含有品と判明した場合などやむを得ず変更することがあります。

＊EU RoHS指令（10物質）：
鉛(Pb) 1000ppm以下、 水銀(Hg) 1000ppm以下、 カドミウム(Cd) 100ppm以下、六価クロム(Cr(VI)) 1000ppm以下、
ポリ臭化ビフェニル類(PBB) 1000ppm以下、ポリ臭化ジフェニルエーテル類(PBDE) 1000ppm以下、
フタル酸ビス(2-エチルヘキシル) (DEHP)(別名：DOP) 1000ppm以下、フタル酸ブチルベンジル (BBP) 1000ppm以下、
フタル酸ジブチル (DBP) 1000ppm以下、フタル酸ジイソブチル (DIBP) 1000ppm以下
但し、RoHS指令で産業用監視および制御機器に対する適用除外項目は除く。
フタル酸エステル類の４物質については閾値を超える意図的な使用がないことを確認しています。

## ※2 対応予定月

部品在庫の切り替え状況などにより、予定月が前後することがあります。

## ※3 非含有証明書ダウンロード

下記の非含有証明書をダウンロードすることができます。
・EU RoHS指令（10物質）の非含有証明書
・49物質の非含有証明書（当社基準）

※本証明書は発行日時点で非含有を証明するもので、過去に遡って非含有を証明するものではありません。
また、RoHS指令のフタル酸エステル類４物質の対応では、対応完了までの期間は出荷製品に未対応品が混在することから備考欄に対応日を記載しておりました。
既に当社にて対応品への在庫切替を完了していることから、特段のことがない限り、2022年1月12日より割愛しております。

# 規格認証/適合状況

| UL認証 | CSA認証 | CEマーキング適合 | CCC認証 |
|---|---|---|---|
| Yes | Yes | Yes | N/A |

| LR型式承認（イギリス船舶規格） | DNV型式承認（ノルウェー船舶規格） | BV型式承認（フランス船舶規格） | KR型式承認（韓国船舶規格） | NK型式承認（日本船舶規格） | ABS型式承認（アメリカ船舶規格） |
|---|---|---|---|---|---|
| Yes | No | No | No | No | No |

この製品の規格認証/適合状況ページへ >
その他の認証はこちらのページからご検索ください >


©OMRON Corporation 2025 All Rights Reserved.
お断りなく仕様などを変更することがありますのでご了承ください