温度調節器（デジタル調節計）

E5AC-RX4DSM-011

商品概要

Digital Temperature Controller, 96 x 96 mm, Relay output, Auxiliary output: 4, Power supply voltage: 24 VAC/VDC, Universal inputs, HB alarm and HS alarm: 1, 6 event inputs, Remote SP input, Transfer output, Screw terminal block model

販売状況

2026/02/02 00:00 情報更新

販売状況	販売中
機種区分	受注生産機種
標準価格(税別)	¥ 51,000

推奨代替品の最新情報につきましては、当社Webサイト(www.fa.omron.co.jp)の「生産終了品/推奨代替品」をご覧ください。
在庫状況/標準価格の最新情報につきましては、当社Webサイト(www.fa.omron.co.jp)の「在庫状況/標準価格 照会」をご覧ください。

詳細情報

Ratings / Performance

情報更新：2025/11/04

Ratings

Shape		DIN 96 x 96
Fixed/Programmable		Fixed
Power supply voltage		24 VAC (50/60 Hz) 24 VDC
Allowable voltage variable range		85 to 110% of the power supply voltage
Power consumption		3.4 W max. (at 24 VDC) 5.6 VA max. (at 24 VAC)
Input	Number of input points	1 point
	Temperature input	Thermocouple: K, J, T, E, L, U, N, R, S, B, C/W, PLII Platinum resistance thermometer: Pt100, JPt100 Infrared Thermosensor: 10 to 70 °C, 60 to 120 °C, 115 to 165 °C, 140 to 260 °C
	Analog input	4 to 20 mA or 0 to 20 mA
	Input impedance	Current input: 150 Ω max., voltage input: 1 MΩ min. (Applicable when connecting 1:1 to ES2-HB-N/THB-N.)
Control method		ON/OFF control or 2-PID control (with auto-tuning)
Control output	Number of total control output	1 point
	Control output 1	Relay output
	Control output 2	None
	Relay output	1 point SPST-NO, 250 VAC, 5 A (resistive load) Minimum applicable load: 10 mA at 5 V
Auxiliary output	Number of total auxiliary output	4 point
	Relay output	SPST-NO, 250 VAC, 2 A (resistive load), electrical life: 100,000 operations (minimum applicable load: 5 V, 10 mA)
Event input		6 point Contact input: ON: 1 kΩ max., OFF: 100 kΩ min. No-contact input: ON: Residual voltage 1.5 V max., OFF: Leakage current 0.1 mA max. Current flow: Approx. 7 mA per point
Transfer output		1 point Current output: 4 to 20 mA DC (Load: 500 Ω max., Resolution: approx. 10000) Linear voltage output: 1 to 5 VDC (Load: 1 kΩ min., Resolution: approx. 10000) Accuracy: ±0.3% FS max.
Remote SP input		Current input: 4 to 20 mA DC, 0 to 20 mA DC (Input Impedance 150 Ω max.)

		Voltage input: 1 to 5 VDC, 0 to 5 VDC, 0 to 10 VDC (Input Impedance 1 MΩ min.) Accuracy: ±0.2% FS ±1 digit max.
Setting method		Digital setting using front panel keys
Indication method		11-segment digital display and individual indicators
Multi SP functions		Up to eight set points (SP0 to SP7) can be saved and selected using the event inputs, or key operations.
Sampling period		50 ms
Hysteresis		Temperature input: 0.1 to 999.9 °C or °F (in units of 0.1 °C or °F) Analog input: 0.01 to 99.99% FS (in units of 0.01% FS)
Proportional band		Temperature input: 0.1 to 999.9 °C or °F (in units of 0.1 °C or °F) Analog input: 0.1% to 999.9% FS (in units of 0.1% FS)
Integral time		0 to 9999 s (in units of 1 s), 0.0 to 999.9 s (in units of 0.1 s)
Derivative time		0 to 9999 s (in units of 1 s), 0.0 to 999.9 s (in units of 0.1 s)
for cooling	Proportional band (P)	Temperature input: 0.1 to 999.9 °C or °F (in units of 0.1 °C or °F) Analog input: 0.1% to 999.9% FS (in units of 0.1% FS)
	Integral time (I)	0 to 9999 s (in units of 1 s), 0.0 to 999.9 s (in units of 0.1 s)
	Derivative time (D)	0 to 9999 s (in units of 1 s), 0.0 to 999.9 s (in units of 0.1 s)
Control period		0.1 s, 0.2 s, 0.5 s, 1 to 99 s (in units of 1 s)
Manual reset value		0.0 to 100.0% (in units of 0.1%)
Insulation resistance		20 MΩ min. (at 500 VDC)
Dielectric strength		3,000 VAC 50/60 Hz 1 min (Between current-carrying terminals of different polarity)
Vibration resistance		Destruction: 10 to 55 Hz, 20 m/s^2 for 2 h each in X, Y, and Z directions Malfunction: 10 to 55 Hz, 20 m/s^2 for 10 min each in X, Y, and Z directions
Shock resistance		Destruction: 300 m/s^2, 3 times each in X, Y, and Z directions Malfunction: 100 m/s^2, 3 times each in X, Y, and Z directions
Ambient temperature (Operating)		-10 to 55 °C (with no freezing or condensation) For 3-year warranty with standard mounting: -10 to 50 °C (with no freezing or condensation)
Ambient temperature (Storage)		-25 to 65 °C (with no freezing or condensation)
Ambient humidity (Operating)		25 to 85 %

Altitude	2000 m max.
Degree of protection	Front panel: IP66, Rear case: IP20, Terminal section: IP00
Memory protection	Non-volatile memory (number of writes: 1,000,000)
Case color	Black
Terminal type	Screw terminal block
Accessories	Mounting adapter, Waterproof packing, Front Port Cover
Weight	Main Unit: Approx. 250 g Adapter: Approx. 4 g x 2
Sold separately	USB Serial Conversion Cable: E58-CIFQ2 Communications Conversion Cable: E58-CIFQ2-E Terminal Cover: E53-COV24 Waterproof packing: Y92S-P10 Waterproof Cover: Y92A-96N Front Port Cover: Y92S-P7 Adapter: Y92F-51 CX-Thermo Support Software: EST2-2C-MV4 Current Transformer (CT): E54-CT1/E54-CT1L/E54-CT3/E54-CT3L

Accuracy

Indication accuracy	Thermocouple: (±0.3% of indicated value or ±1 °C, whichever is greater) ±1 digit max. Platinum resistance thermometer: (±0.2% of indicated value or ±0.8 °C, whichever is greater) ±1 digit max. Analog input: ±0.2% FS ±1 digit max. (The indication accuracy of K thermocouples in the -200 to 1300 °C range, T and N thermocouples at a temperature of -100 °C max., and U and L thermocouples at any temperatures is ±2 °C ±1 digit max. B thermocouple at a temperature of 400 °C max. is not specified. B thermocouples in the 400 to 800 °C range is ±3 °C max. R and S thermocouples at a temperature of 200 °C max. is ±3 °C ±1 digit max. C/W thermocouples is (±0.3% PV or ±3 °C, whichever is greater) ±1 digit max. PL II thermocouples is (±0.3% PV or ±2 °C, whichever is greater) ±1 digit max.)
Influence of temperature/voltage	Thermocouple: R, S, B, C/W, and PLII: (±1% of indicated value or ±10 °C, whichever is greater) ±1 digit max. Other thermocouple: (±1% of indicated value or ±4 °C, whichever is greater) ±1 digit max.. However K thermocouple at -100 °C max.: ±10 °C max. Platinum resistance thermometer: (±1% of indication value or ±2 °C, whichever is greater) ±1 digit max. Analog input: ±1% FS ±1 digit max. CT input: ±5% FS ±1 digit max. Remote SP input: ±1% FS ±1 digit max. Ambient temperature: -10 to 23 to 55 °C, Voltage range: -15 to 10% of rated voltage
Influence of EMS.	Thermocouple: R, S, B, C/W, and PLII: (±1% of indicated value or ±10 °C, whichever is greater) ±1 digit max. Other thermocouple: (±1% of indicated value or ±4 °C, whichever is greater) ±1 digit max.. However K thermocouple at -100 °C max.: ±10 °C max. Platinum resistance thermometer: (±1% of indication value or ±2 °C, whichever is greater) ±1 digit max. Analog input: ±1% FS ±1 digit max. Remote SP input: ±1% FS ±1 digit max.
Influence of signal source resistance	Thermocouple: 0.1°C/Ω max. (100 Ω max.) Platinum resistance thermometer: 0.1°C/Ω max. (10 Ω max.)

Heater burnout /SSR failure detector

CT input (for heater current detection)	1 point
Max. heater current	Single-phase 50 A AC
Input current indication accuracy	±5% FS ±1 digit max.
Heater burnout alarm setting range	0.1 to 49.9 A (in units of 0.1 A) Minimum detection ON time: 100 ms (The value is 30 ms for a control period of 0.1 s or 0.2 s)
SSR failure detector alarm setting range	0.1 to 49.9 A (in units of 0.1 A) Minimum detection OFF time: 100 ms (The value is 35 ms for a control period of 0.1 s or 0.2 s)

Dimensions

情報更新：2025/11/04

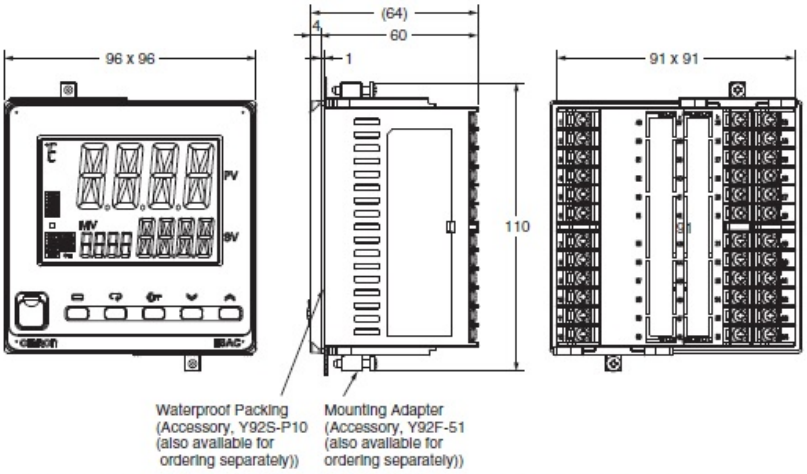

- Setup Tool ports are provided as standard feature. Use these ports to connect a computer to the Digital Temperature Controller. The E58-CIFQ2 USB-Serial Conversion Cable is required to connect to the port on the top panel. The E58-CIFQ2 USB-Serial Conversion Cable and E58-CIFQ2-E Communications Conversion Cable are required to connect to the port on the front panel. (You cannot leave either port connected constantly during operation.)

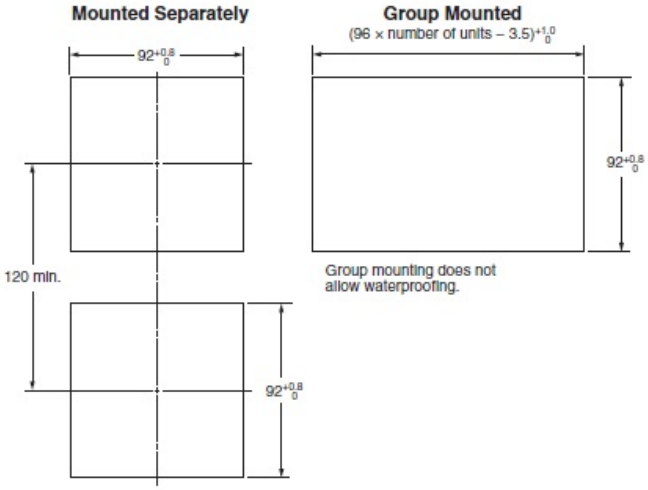

- Recommended panel thickness is 1 to 8 mm.
- Group mounting is not possible in the vertical direction. (Maintain the specified mounting space between Controllers.)
- To mount the Controller so that it is waterproof, insert the waterproof packing onto the Controller.
- When two or more Controllers are mounted, make sure that the surrounding temperature does not exceed the allowable operating temperature specified in the specifications.

Connection diagram

情報更新：2025/11/04

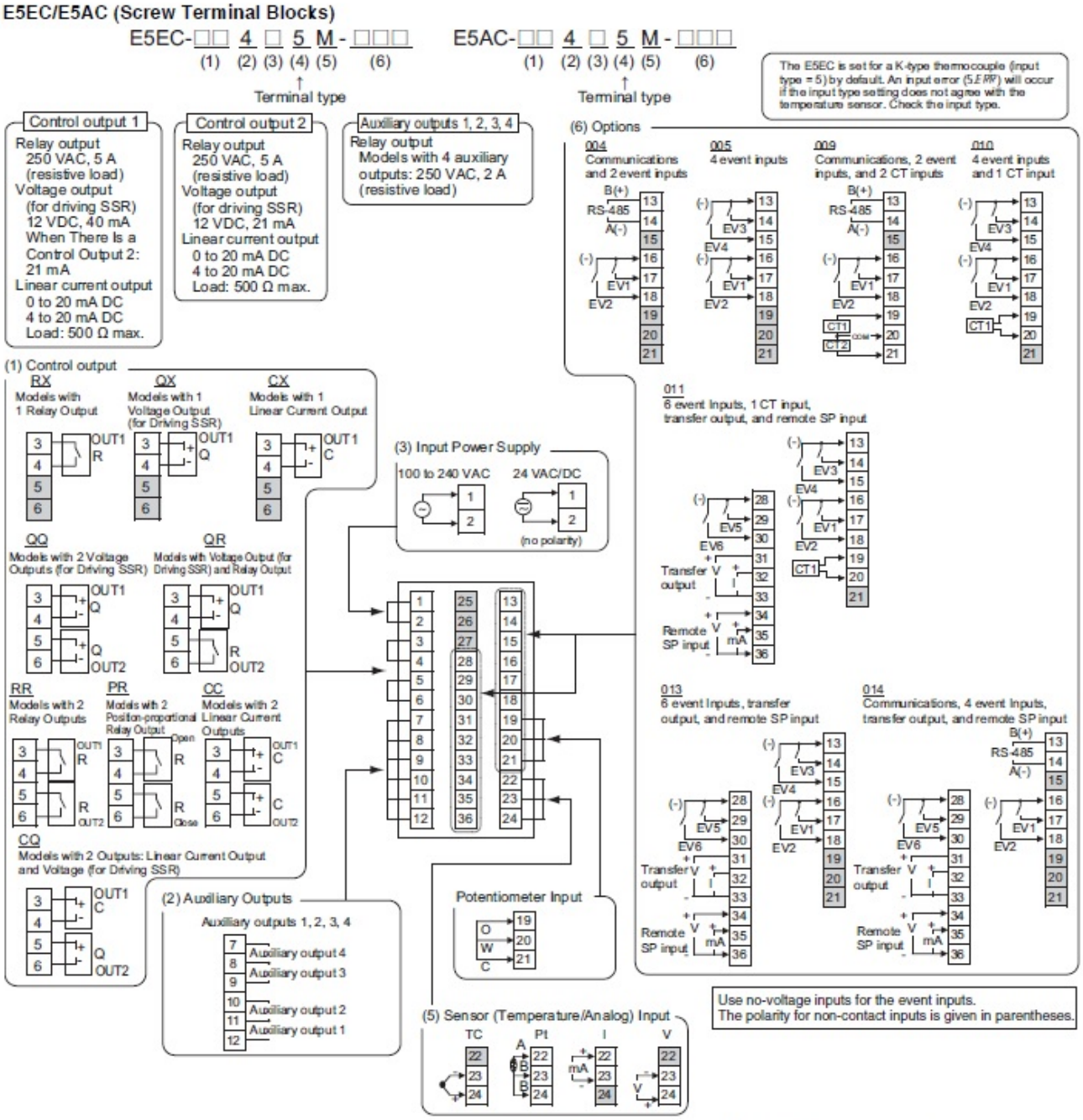

Note: 1. The application of the terminals depends on the model.
2. Do not wire the terminals that are shown with a gray background.
3. When complying with EMC standards, the cable that connects the sensor must be 30 m or less. If the cable length exceeds 30 m, compliance with EMC standards will not be possible.
4. Connect M3 crimped terminals.
5. Due to UL Listing requirements, use the E54-CT1L or E54-CT3L Current Transformer with the factory wiring (internal wiring). Use a UL category XOBA or XOBA7 current transformer that is UL Listed for field wiring (external wiring) and not the factory wiring (internal wiring).

Input ranges list

情報更新：2025/11/04

Thermocouple/Platinum Resistance Thermometer (Universal inputs)

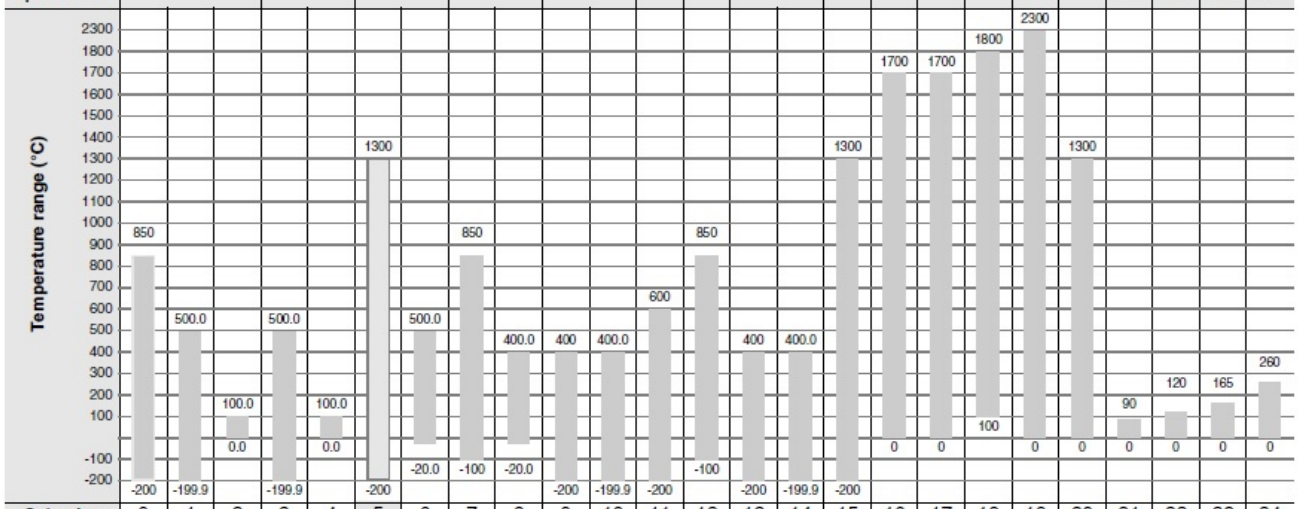

Sensor type	Platinum resistance thermometer					Thermocouple																	Infrared temperature sensor			
Sensor specification	Pt100			JPt100		K		J		T		E	L	U		N	R	S	B	C/W	PLII	10 to 70°C	60 to 120°C	115 to 165°C	140 to 260°C
Set value	0	1	2	3	4	5	6	7	8	9	10	11	12	13	14	15	16	17	18	19	20	21	22	23	24
Upper limit	850	500.0	100.0	500.0	100.0	1300	500.0	850	400.0	400	400.0	600	850	400	400.0	1300	1700	1700	1800	2300	1300	90	120	165	260
Lower limit	-200	-199.9	0.0	-199.9	0.0	-200	-20.0	-100	-20.0	-200	-199.9	-200	-100	-200	-199.9	-200	0	0	100	0	0	0	0	0	0

Shaded settings are the default settings.

The applicable standards for the input types are as follows:

K, J, T, E, N, R, S, B: JIS C 1602-2015, IEC 60584-1
L: Fe-CuNi, DIN 43710-1985
U: Cu-CuNi, DIN 43710-1985
C/W: W5Re/W26Re, JIS C 1602-2015, ASTM E988-1990
JPt100: JIS C 1604-1989, JIS C 1606-1989
Pt100: JIS C 1604-1997, IEC 60751
PL II: According to Platinel II electromotive force charts from BASF (previously Engelhard)

Analog input

Input type	Current		Voltage		
Input specification	4 to 20 mA	0 to 20 mA	1 to 5 V	0 to 5 V	0 to 10 V
Setting range	Usable in the following ranges by scaling: -1999 to 9999, -199.9 to 999.9, -19.99 to 99.99 or -1.999 to 9.999				
Set value	25	26	27	28	29

RoHS/REACH対応状況

情報更新：2026/1/21

EU RoHS

対応状況 ※1	対応予定月 ※2	非含有証明書 ※3
対応済み		ダウンロードはこちら

中国 RoHS

中国 RoHS表 ※1※2										
Pb	Hg	Cd	Cr(VI)	PBBs	PBDEs	DBP	DIBP	BBP	DEHP	環境保護使用期限
X	O	O	O	O	O	O	O	O	O	10

・“対応済み”や非含有の記載がされた商品であっても、流通在庫等で未対応品が混在する可能性があります。
・非含有品が必要な際は、弊社営業部門もしくは販売店へお問い合わせください。

この製品のRoHS/REACH対応状況ページへ >

注意事項・凡例

”対応済み”で記載される商品であっても、流通在庫等で未対応品が混在する可能性があります。
非含有品が必要な際は、弊社営業部門もしくは販売店へお問い合わせください。

※1 対応状況

- Ro 対応済み　　：EU RoHS指令（10物質）の非含有に対応した製品が提供可能な商品です。
- 対応予定　　：EU RoHS指令（10物質）の非含有に対応した製品に切り替える予定のある商品です。
- 対応予定なし　　：EU RoHS指令（10物質）の非含有に非対応の商品で、対応品を出す予定はありません。
- 調査・確認中　　：EU RoHS指令（10物質）の非含有の対応状況を調査中または確認中の商品です。
- 非該当品　　：ライセンス料など無形物で、有害物質有無と関係のない商品です。

仕入先様の事情により、非含有部品としていたものが、含有品と判明した場合などやむを得ず変更することがあります。

＊EU RoHS指令（10物質）：
鉛(Pb) 1000ppm以下、 水銀(Hg) 1000ppm以下、 カドミウム(Cd) 100ppm以下、六価クロム(Cr(VI)) 1000ppm以下、
ポリ臭化ビフェニル類(PBB) 1000ppm以下、ポリ臭化ジフェニルエーテル類(PBDE) 1000ppm以下、
フタル酸ビス(2-エチルヘキシル) (DEHP)(別名：DOP) 1000ppm以下、フタル酸ブチルベンジル (BBP) 1000ppm以下、
フタル酸ジブチル (DBP) 1000ppm以下、フタル酸ジイソブチル (DIBP) 1000ppm以下
但し、RoHS指令で産業用監視および制御機器に対する適用除外項目は除く。
フタル酸エステル類の４物質については閾値を超える意図的な使用がないことを確認しています。

※2 対応予定月

部品在庫の切り替え状況などにより、予定月が前後することがあります。

※3 非含有証明書ダウンロード

下記の非含有証明書をダウンロードすることができます。
・EU RoHS指令（10物質）の非含有証明書
・49物質の非含有証明書（当社基準）

※本証明書は発行日時点で非含有を証明するもので、過去に遡って非含有を証明するものではありません。
また、RoHS指令のフタル酸エステル類４物質の対応では、対応完了までの期間は出荷製品に未対応品が混在することから備考欄に対応日を記載しておりました。
既に当社にて対応品への在庫切替を完了していることから、特段のことがない限り、2022年1月12日より割愛しております。

規格認証/適合状況

UL認証	CSA認証	CEマーキング適合	CCC認証
Yes	Yes	Yes	N/A

LR型式承認（イギリス船舶規格）	DNV型式承認（ノルウェー船舶規格）	BV型式承認（フランス船舶規格）	KR型式承認（韓国船舶規格）	NK型式承認（日本船舶規格）	ABS型式承認（アメリカ船舶規格）
Yes	No	No	No	No	No

この製品の規格認証/適合状況ページへ >
その他の認証はこちらのページからご検索ください >

©OMRON Corporation 2025 All Rights Reserved.
お断りなく仕様などを変更することがありますのでご了承ください